Roto-Crease Accessories

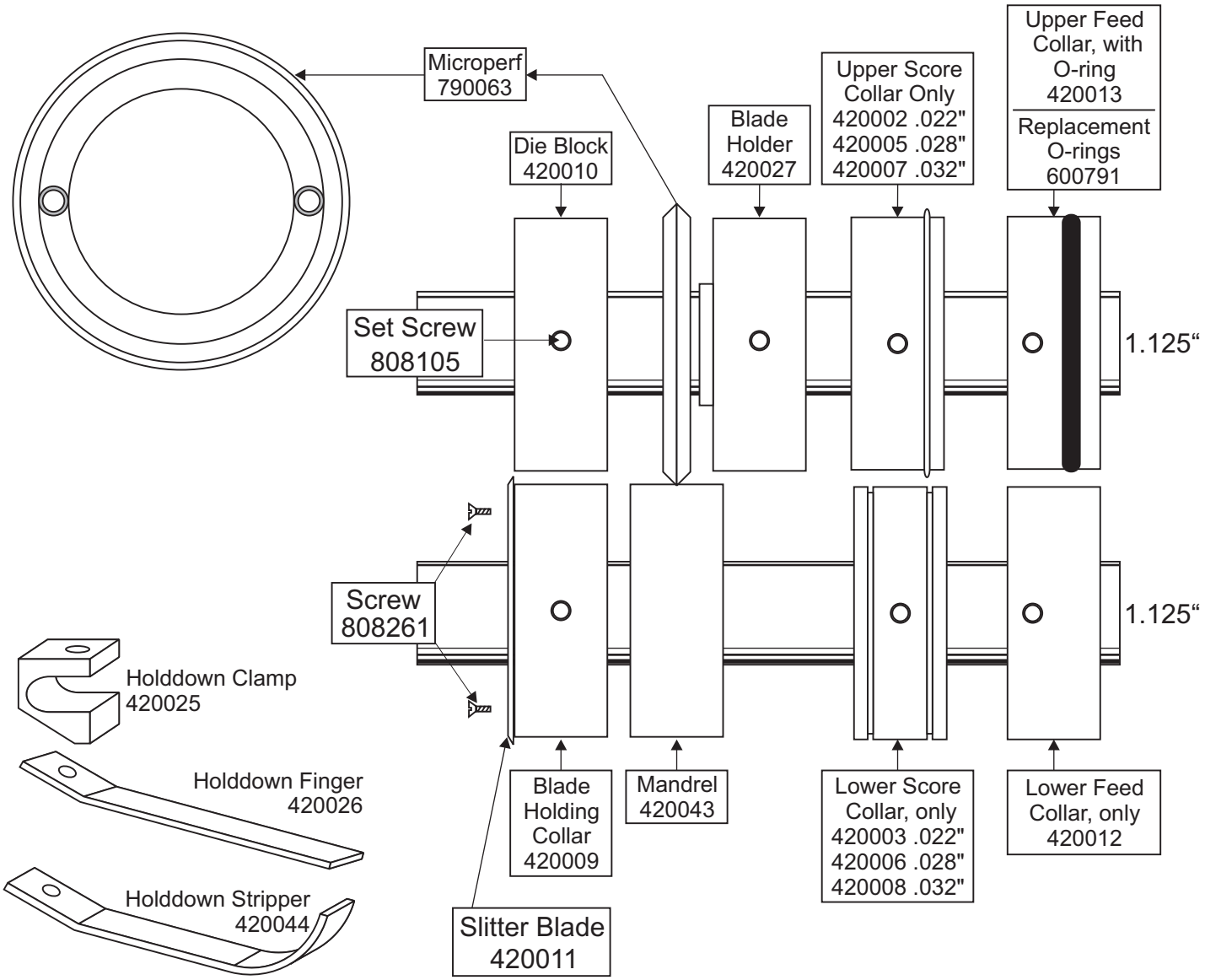

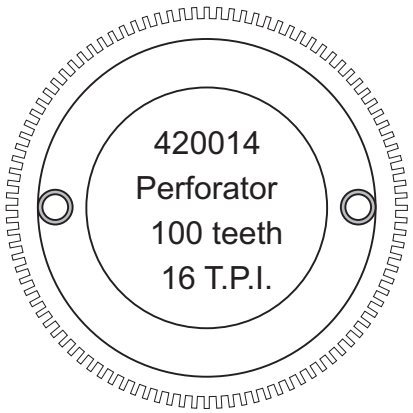

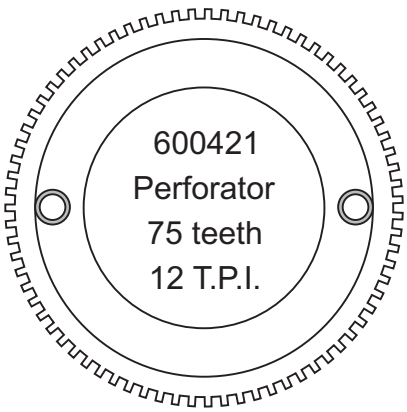

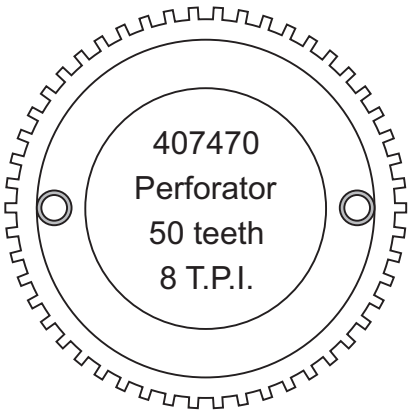

© KEPES 2009

www.kepes.com
KEPES
Equipment for finishing and mailing
262.652.7889
inquire@kepes.com